Blog entry on 3D + Robotics - DIG007AS3AE-3004

Introduction

You, your background in programming, 3D or robotics, if any

Eric:

I'm Erkka 33yo sophomore student at HH, majoring in Cloud and Infrastructure technology studies. I had no background in coding, 3D, or robotics before this course, besides Basic 3D Blender and IoT Experimental courses where I have learned the bare minimum about Blender and C++ code language.

Vili:

I'm a 30 yo Sophomore student at HH, also majoring in Cloud and Infrastructure. While I have no previous experience in coding or robotics, I've been messing around with 3D printing for a while, using resin printers to create miniatures for DnD campaigns. I've been a big fan of building Lego ever since I was small, so constructing something like this project was very fun for me.

Janne: I'm Janne, 23yo Senior student senior student at HH, Majoring in Digital Services as a Bachelor of Business Information Technologies. Coming to this course, I have a background in website development, so I'm familiar with HTML/JavaScript and CSS. I also know a little coding in Python, but other than that, I have no previous experience in robotics or programming.

Ideas

We started our journey with a brainstorming session by using the 6-3-5 method, where we managed to gather 24 different ideas:

Beer ideas: Temperature indicator, freezer reminder indicator
TTRPG ideas: Turn indicator, light-up-dice
Alarm clock ideas: Clock that hits you to wake up, clock that runs away
Curtain ideas: Curtain opener, automated window lid opener,
Other ideas: Russian roulette game, remote controlled CCTV-camera, AI-powered desk companion, controllable tank that brings you beer. And many more, for the whole documentation, you can always visit our original documentation: 6-3-5.

After some brainstorming, we had a hard time picking the most realistically achievable project. We decided, since we had so many ideas remotely related to beer, that we should keep ourselves close to that specific topic. Thus far, we ended up with the idea of a desk companion that loves beer. The key factor for our decision was our Teacher's Heikki Hietala's wish:

"*It moves a lot, makes a lot of noise and show but does nothing*".

What did you need to learn

As most of us didn't really have any previous experience working with robotics or C++ programming, our learning objective was to understand how to use Arduino and make use of AI tools to help us program our project and take advantage from codes from previous projects.

We proceeded with our project by using the Lotus method to scope out our desk companions' technical attributes; Lotus and we came up with 7 main features that defined what we are going to have in our build and what we have to do so that all the components work together.

Original features were:

Physical Body

Base for the body

Moving Hand

Speaker with amplifier

LED status bar

Base

A cup with an electrode-based principle to detect a signal

A microphone for detecting the surrounding sound

The initial scope of the project was to make a doll imitating an “average Finnish student” that would react to someone pouring liquid into its cup by saying obscene phrases and loud sounds and with the liquid in the cup it would move its hand simulating drinking from the cup and to possibly react to “too loud” surrounding voice levels again by shouting obscene phrases.

And of course, we had to name our project:
H.E.I.K.K.I short from:

Haaga-Heliaa

Edustava

Intellektuelli

Kaljaa

Kittaava

Individuaali

The building phase

Once we had the idea down, we delegated ourselves to different tasks: Janne started by doing some test runs on the Servo motors, Eric started to work on the sound and the amplifier, and Vili, being the most artistic one, started designing the basics of our whole build.

We figured that if we made one key feature work, we would move on to the next one.
It became evident at an early stage that the microphone feature could not be implemented as we originally envisioned. The needed component would be simply too big for our project, and we dropped the microphone feature.

Soon after, we found the foundation for our project; a doll from a recycling center. It was an old two-faced baby doll with a head capable of turning 360°. Once we had the doll, we had the possibility to test fit our components to it, design, and decide what kind of base part for the doll was going to be.

Picture 1 One of the original ideas we were planning to use, but it proved a bit too horrifying and nightmarish.

Picture 2 Our doll as we found it in a recycling center

After test-fitting and figuring out what kind of skeleton our doll must have, Vili proceeded with printing all the parts.

Eric proceeded to implement working servo motor code first for the head and later, when Vili's printed parts were available, for the hand.

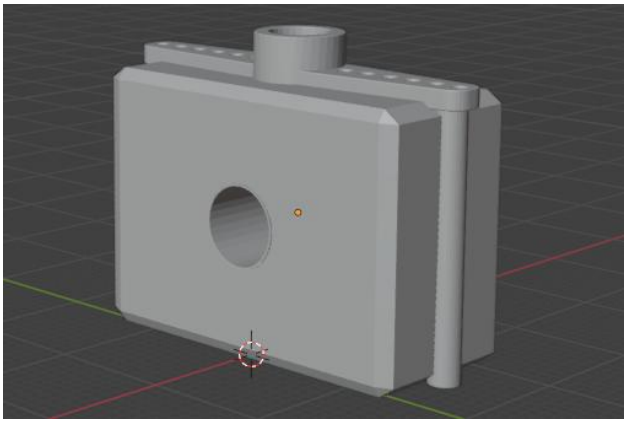

Picture 1. The first iteration of our hand attachment, where we had the servo wings built into it.

After making the head and hand servo motors work on the body, we concentrated our efforts to print the base for the doll and create start up sequence.

During the creation of the startup sequence, the initial cardboard structural pieces were replaced with 3D printed ones to improve the durability and stability of the body. Once the skeletal frame was assembled, Vili designed and printed a mug for our doll, and Eric created an electrode-based sensing mechanism for the cup after the cup was printed, to make it work/react with the servo motors. However, when testing it was revealed that the initial servo motor didn't have sufficient torque to lift the cup. To resolve this, we had to upgrade our servo motor for 15kg high-torque servo motor, which required us to upgrade the structural components as well to match the bigger servo motor. After this, it was all about getting all the components to fit together nicely. Once we finally got everything assembled, we had to reprint the base cover; when the doll was activated all the liquid in the cup was poured straight through the speaker and LED graph cutouts into the base. We also realized that our regular tap water was too pure and thus not conductive enough (we solved this by adding a pinch of salt to the cup before testing).

In the end, we spent most of our time fine-tuning the doll's movements to make it feel more interactive, personal, perhaps alive.

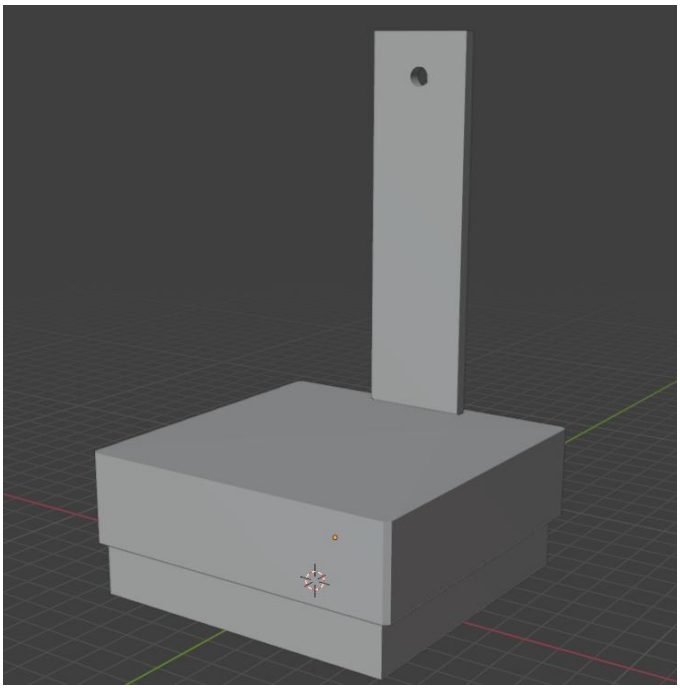

Picture 2. The entire base our doll sits on consists of three different parts. The bottom and top of the base and the spine/backbone.

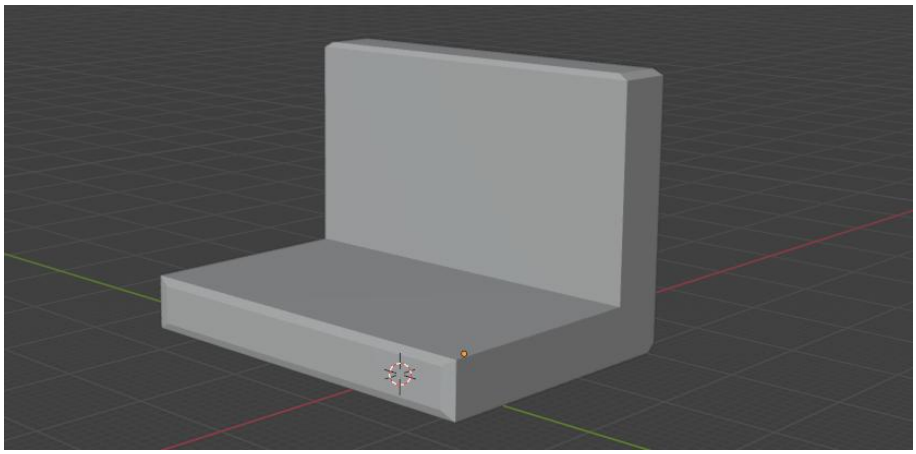

Picture 3. Our arm attachment point ended up going through multiple revisions. This is the final L-shape we ended up with.

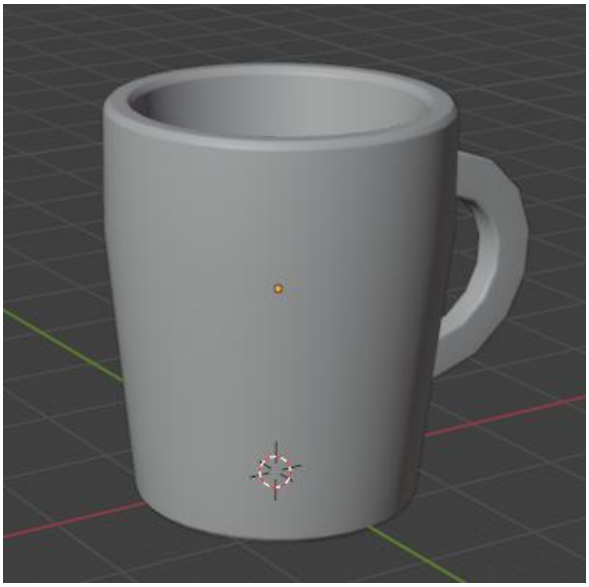

Picture 4. The cup our doll uses to drink from.

The final result is a lifelike doll that wakes up, burps, and goes back to sleep when powered on. Giving it a drink triggers a sequence of head turns and sipping sounds. An LED bar tracks its 'thirst'; once full, the doll demands beer by banging its head with the cup with soundeffects, eventually giving up after three failed attempts. Also, per our teacher's suggestion, we created a can to replace the liquid contact in the cup to trigger the sensors more reliably

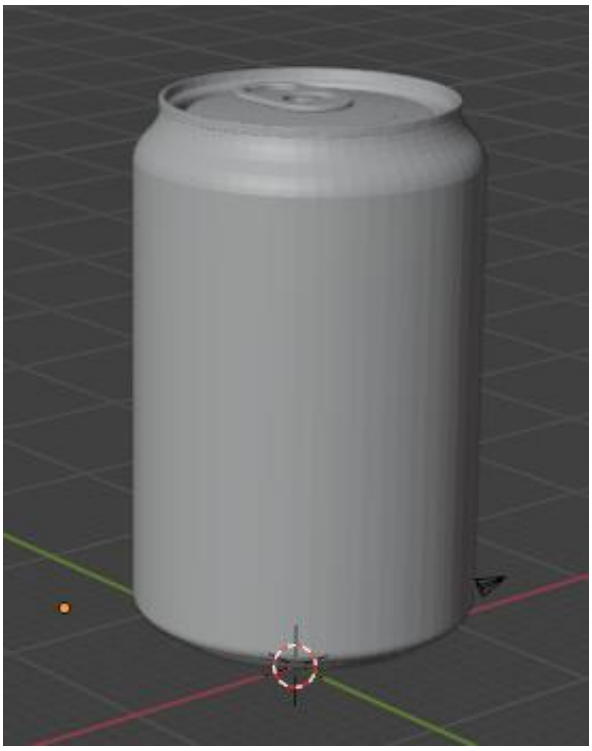

Picture 5. Thingiverse provided us with this 3D model of a can we ended up using as our dolls drink to close the circuit in its cup.

The outcome

Picture 6 Our finished project in all its glory.

Janne: I learned the basics of Arduino and really got to experience how the progress of making a robot goes, and even though we mostly used AI to code our project, I got some experience in how C++ syntax works. This is one of my final school courses, I'm not sure I'll get to experience more tinkering, at least during my time in school, but it was for sure fun, and I might try doing some more robotics action in the future.

Vili:

I got to go very deep in mapping out possible builds and structures for our project, as well as immediately dive back into work on using Blender after the Basic 3D Design with Blender course last autumn. Even though I didn't do much (if any) coding, I still enjoyed being a part of this project, tinkering with models, structures, and ideas on how things should connect and where. Using our school's 3D lab to its fullest was also incredibly fun, seeing how some of the newest PLA printer's work. Getting to go so deep into Blender and creating things that turned into actual parts in our project was also very rewarding and incredibly fun, as was the problem-solving we ran into along the way. Many parts of the project seemed to come into place perfectly by accident.

I really enjoyed this course, and it made me think of taking the IoT course, so I could try my hand at building one of our different project ideas, like the TTRPG initiative tracker!

Eric:

Overall, this was once again another highly rewarding and fun course experience. It was very gratifying to use previously acquired skills, mostly from the IoT Experimental course, and some small parts from the Basic Blender course, and implement them in a practical context. I was particularly pleased with how the initial concept evolved into more than a successful outcome, with everything aligning with the intended objectives. As always, embracing personal challenges and overcoming creative block at the beginning of the course is also a significant part of this course's journey and the learning process. I would GLADLY try to make a similar project in the future.

GitHub Repository 3D-Robotics-H.E.I.K.K.I